THE BEHAVIOUR OF D.C. OVERCURRENT ARCS IN CARTRIDGE FUSELINKS

R. Oliver

INTRODUCTION Sand-filled fuses subjected to overcurrent faults between minimum fusing current and up to ten times the rated current usually melt at a single point on the conducting element. Single point melting results in the initiation of only one arc per element with initial conditions which are determined by the instantaneous current at melting, its rate of change and the initial arc voltage step. As arcing proceeds, the arc length increases by the erosion of the element material which forms the anode and cathode of the arc and simultaneously a tube of molten filler is formed having a cross-section related to the element geometry.

Fuses are likely in practice to be subjected to either a.c. or d.c. faults and consequently must be designed to interrupt fault currents from both sources. The absence of natural current zeros in the d.c. case means that the fuse arc(s) must cause the current in the circuit to fall to the extinction current to achieve interruption. With high d.c. fault levels this is more easily achieved since a number of series arcs are usually involved. With the d.c. single arc the fuse encounters the most difficult condition commonly found in power systems protected by fuses.

Operation under these circumstances is characterised by a relatively slow growth in the arc voltage across the fuse giving a corresponding decline in the magnitude of the current. Extinction of the arc occurs at a few amperes and is followed by a decaying post-arc current with virtually full open circuit applied volts across the fuse. It is clear from design experience and previous work[1] that not only filler type and cartridge dimensions but also the geometry of strip elements used in modern cartridge fuselinks has some influence on the properties of the d.c. overcurrent arc.

EXPERIMENTAL DETAILS Several relationships and properties controlling the fuse arc under d.c. overcurrent conditions are of interest when considering variations in element strip width and thickness. For example:

(a) Arc voltage / arc length and anode / cathode erosion.
(b) Arc length / time.
(c) Arc column pressure transmitted to the cartridge wall[2].
(d) Arc extinction currents.
(e) Post - arc currents.
(f) Fulgurite (fused filler tube surrounding the arc column) formation and structure.

Experimental Elements All elements used in the experiments described are of commercially available (99.97% purity) silver having a single reduced section at the mid-point as shown in Fig.1. The nominal dimensions for the range of strip elements used include strip widths up to 0.8128cm and silver thicknesses between 2.54×10^{-3} and 2.54×10^{-2}cm.

Mr. Oliver is with GEC-English Electric Fusegear Ltd., Liverpool,England.

Experimental Cartridge Fuse Standard cartridge fuselinks in commercial use often consist of a cylindrical ceramic tube or body containing element and filler sealed by end caps having an interference fit onto the outer diameter of the tube. This construction is not convenient for experimental work where high accuracy in the positioning of a single element along the axis of the cartridge is required and a large number of repeatable fuse operations are to be undertaken. In addition, the recovery of the delicate fulgurites after test with a minimum of disturbance during the dismantling procedure has to be arranged if an examination of length and structure is to be easily performed.

The design of the fuselink used is shown in Fig.2. All experimental work being done with the fuse mounted in the vertical position and filled with 99.7% silica sand having a mean grain size of 0.488 mm. compacted by a standard technique.

Power Circuit Fusing currents are obtained by the application of a 450 v nominal d.c. source to the R - L circuit shown in Fig. 3.

When required, a shorting thyristor is connected across the fuse and by presetting the gate circuit to provide the desired arc voltage trigger level the arc is extinguished before natural interruption by the fuse.

Circuit resistance and inductance are a resistor bank and fixed air-cored coil of 6.34 mH respectively, the latter remaining unchanged throughout the experimental programme.

Voltage and Current Measurements The fuse voltage is recorded throughout the pre-arcing, arcing and post-arc (recovery) periods. Generally this trace shows a very low deflection during the pre-arcing period, an increasing voltage with initial step during arcing and a steady recovery voltage usually exhibiting a small post-arc transient oscillation.

Current measurements are derived from two sources, the first by recording the voltage across a calibrated non-inductive shunt giving a trace deflection proportional to the current. The second method results from the need for good resolution of currents in the range from fusing currents of several hundred amperes down to extinction values of a few amperes and decaying post-arc currents in the order of milliamperes. The technique investigated and adopted for this purpose is the measurement of the forward volt-drop of three parallel diodes carrying the fuse current. Forward volt-drop values are determined for currents from 0.1 mA to 500 A and the calibration curve established by curve-fitting an 11th order polynomial having minimum variance.

Measurement of Arc Length To determine the final or interrupted arc lengths the fulgurites are removed and measured using a vernier microscope. All measurements being taken with reference to a datum line outside the arcing region and an accurately known distance from the initiation point of the arc. This allows total arc length and anode / cathode burnback values to be determined.

EXPERIMENTAL RESULTS Continuous oscillographic records of each fuse operation show the melting, arcing and post-arc currents, fuse voltage and cartridge wall pressure. (See Fig. 4). These traces, together with fulgurite length measurements provide the data source for the following results.

Arc Length at Natural Extinction Arc lengths at natural extinction show

changes with both width and thickness of the silver strip elements but no significant effects are observed due to changes in initial fusing current.

Considering first the strip thickness it is apparent from Figs. 5 and 6 that reduction of this parameter decreases the final arc length significantly. Most of this decrease is observed in the lower half of the thickness range. Less scatter is found with the thinner sections despite the shorter arc lengths where measurement errors would tend to be more significant.

Strip width effect is demonstrated by again comparing the Figures 5, 6 and 7 where the three widths studies, namely 0.1524 cm, 0.3048 cm and 0.8128 cm show decreasing arc lengths respectively, with the exception of the thinnest material. Final arc lengths with the latter remain relatively constant at 3.5cm. for the three strip widths. One interesting anomaly is that shown by the widest strip where a maximum arc length occurs in the middle of the thickness range.

The curves discussed above are derived from results at a wide range of fusing currents, there being no consistent differences in the arc lengths of fuses subjected to the range of overcurrents being studied. Since the arcs are initiated at a predetermined point on the element it is possible to measure the extension of the arc in both anode and cathode directions. Figure 8 shows that differences in the anode and cathode burnback can occur with particular strip geometries. With the thinnest strip the cathode extension is approximately 1.6 times that for the anode and has a similar ratio for the three widths examined. With increasing thickness this effect becomes less apparent and for 1.3716×10^{-2}cm. and greater the anode and cathode burnback are equal. With arcs extinguished prematurely by use of the shorting thyristor at various stages in their growth, the anode burnback is found to be greater even before the arc voltage has reached 100 v for conditions where anode / cathode differences are observed in final length results. Where final arc lengths are equally attributable to cathode and anode burnback the same situation is found to prevail throughout the arcing period.

Arc Column Electric Field When the shorting thyristor system is used the average axial electric field between electrodes may be determined as the instantaneous voltage per cm. of arc length at the time of interruption. Field values determined in this way show a considerable variance for apparently similar experimental conditions. Changes in the average field as a function of strip width are not observed but the field is seen to increase as the thickness is reduced as shown in Figure 9.

When the arc is initiated in a fuse it is subject to different fusing currents and during arcing the current falls to low extinction currents. Possible variations in the average field with current were studied for one element form with two initial currents. Interruption of the arc at a number of arc voltage levels with both initial currents yields field-instantaneous current data shown in Figure 10. Experimental values are plotted on common axes for both initial currents and reveal that when the arc current falls to approximately 50 amperes further reduction in current is associated with a decline in axial field. This decline continues to fields corresponding to the band of recovery voltage / final arc length ratios found in fuses not subjected to premature extinction.

Arc Extinction Current Measurements of arc extinction currents taken at the commencement of the final voltage transient show a marked consistency

for all element geometry and fusing current conditions. No significant trends are observed, the arc extinction currents being in the range 1.5 to 7.2 amperes with a mean for all arcs of 3.45 amperes.

Post-arc Current The current flowing through the fuse immeadiately after extinction of the arc is carried by the fulgurite tube formation remaining These currents are in the range 10^{-3} to 1.0 amperes and increase with the cross-sectional area of the silver strip in the fuse.

Recovery voltage data corresponding to the instantaneous post-arc current allows the fuse resistance (R_f) to be determined. R_f is a function of fulgurite cross-section, length (y) and temperature and since the final length is known it follows that assuming most of the current is conducted by the fused silica :

$$R_f = \frac{U\ y}{A}$$

$$\text{hence} \quad \frac{y}{R_f} = \frac{A}{U}$$

where A, the cross-sectional area of the fused silica is not uniform along the length of the fulgurite and U, the resistivity of the silica is temperature dependent. Curves showing observed values of R_f for the range of element strips studied are given in Figure 11.

FUSE VOLTAGE - CURRENT - ARC LENGTH MODEL. It has been suggested[1] that the behaviour of the fuse arc may be modelled by assuming that the mass of electrode metal eroded is directly proportional to the electrical charge passing through the arc column. One further approximation is that the average axial electric field remains constant throughout the arcing period and this leads to the following equations:

$$V_D = L\frac{di}{dt} + iR + V_a \qquad (1)$$

$$V_a = E\ l_a + k_o \qquad (2)$$

$$l_a = \frac{c}{q}\int i(t)dt \qquad (3)$$

where V_D = applied voltage
t = time (secs)
L = circuit inductance (henries)
R = circuit resistance (ohms)
i = instantaneous current (amperes)
V_a = arc voltage
l_a = arc length (cm.)
E = axial electric field (v cm^{-1})
k_o = initial arc voltage
c = specific 'burn off' constant(cub.cm.per coulomb)
q = cross-sectional area of fuse element (sq.cm.)

Equations (1),(2) and (3) may be combined to form:

$$L\frac{d^2i}{dt^2} + R\frac{di}{dt} + \frac{c\ E}{q}\ i = 0$$

which may be readily solved to provide an analytical solution for the current flowing in the circuit. Examples of the use of this model may be found in Figures 4 and 7 where the virtues and limitations of the charge-controlled model are illustrated by the broken-line curves.

DISCUSSION AND CONCLUSIONS Experimental results indicate that the charge-controlled model is not entirely satisfactory in describing the fuse arc under d.c. overcurrent conditions. The main cause of this is the assumption that a constant average electric field is maintained throughout the arcing period when in fact the final arc length found experimentally suggests a decline in the field as extension of the arc progresses. This decline is confirmed by the comparison of fields in the early part of the arcing period with the voltage / final arc length ratios found at extinction.

Widest strips provide the nearest approximation to the model, the narrower elements having longer final arc length than might be expected. This is despite the indications that, in the latter case, the field is the same as for wider strip of the same thickness in the early part (>50 amperes) of the arcing period.

These findings suggest that there is a general division of the arcing behaviour into two phases, the first being at a field which remains constant or decreases only by a small amount, the second being subject to a significant decrease in field resulting in longer arcs than anticipated.

Considering the reasons for this decline of the field in the second phase, it is not sufficient to suggest that the fall in current is responsible since it would be more logical to expect the reverse effect under these circumstances. If the conditions of low current, $\frac{dl_a}{dt}$ and $\frac{di}{dt}$ immediately before extinction are approximated to a quasi steady-state, then increases in the field like those observed in the static characteristics of the wall-stabilised arc might be expected. In fact small increases in the field are only evident in the last 5 milliseconds of arcing before the post-arc voltage transient.

Behaviour of the fuse arc column in both phases is likely to be controlled by radial power losses to the surrounding gas and fused silica tube. The fact that thin strip generates higher axial fields in the first phase suggests that the radial losses to a silica tube of small dimensions are greater due to the closer proximity of arc column and tube wall. The field remaining reasonably constant implies that a stable power input-radial loss balance is achieved during the first phase. If the field is maintained virtually constant in this first phase by the loss mechanism then in the second phase the transfer of energy would appear to be subject to a progressive reduction in the ability of the arc column to dissipate the input power. Changes in the thermal conductivity of the surrounding gas and reduction in arc radius are both possible reasons for the decrease in axial field in the later stages of the arc. Other work[3] with arcs in SF_6 suggests that for arcs of radius 0.5 mm. between 10 and 100 amperes a similar reduction in field is observed

Extinction of the fuse arc occurs at approximately 3 amperes with the experimental conditions studied. Transition time from extinction current to post-arc current varies with element geometry from times too short to measure with the u.v. recorder time-base to a maximum of 4 milliseconds with large cross-section strips.

Post-arc currents provide an indication of the fulgurite condition immediately after extinction of the arc by allowing the resistance of the post-arc column and hot silica tube to be determined. Resistance per unit length of the fulgurite shows an approximately inverse proportionality to both width and thickness over a substantial part of the range of

values studied. This suggests that the post-arc current is conducted mainly by the fused silica and it can be observed for several seconds after extinction, the current decaying typically to less than 100 microamperes as the fulgurite cools.

General observations on the behaviour of the arc show sudden drops in arc voltage followed by a steady recovery to previous levels with amplitudes up to 60 volts. These are greatest with the widest strip and rarely seen with the narrowest. Kroemer[1] observed these changes and attributed them to the shorting of the voltage probes by element metal projected from the electrode region. Since this probability is eliminated by taking the arc voltage measurements externally, it is likely that this phenomenon is due to arc transfer across the width of the strip to points providing shorter arc-length. These gross changes are superimposed on a rising arc voltage having a second fluctuating component, which being always present, has a variable frequency typically greater than 1 kHz and amplitude of 15-20 volts. This behaviour may be attributable to smaller movements of the cathode and anode regions of the arc which occur independently of the large lateral changes in position found with wide strip electrodes.

It is clear from this work that although the charge-controlled model of the fuse arc provides a good basis for the prediction of its behaviour under d.c. overcurrent conditions it is subject to error, principally caused by the constant electric field assumption.

Decreases in the second phase of arcing seems likely to be caused by changes in the energy transfer conditions between arc column and fused silica. Increased arc lengths at extinction resulting from this are the main reason for the d.c. overcurrent fault condition being considered the most onerous for a fuse to interrupt in practice.

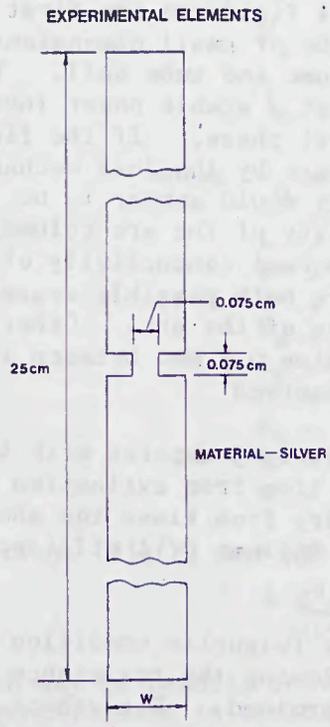

FIGURE 1

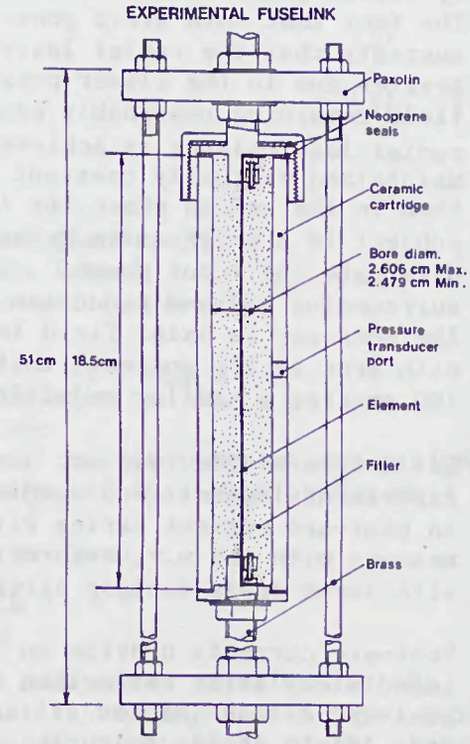

FIGURE 2

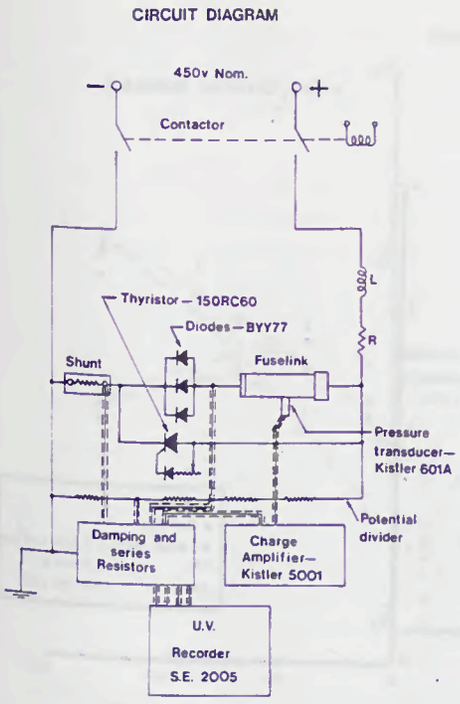

FIGURE 3

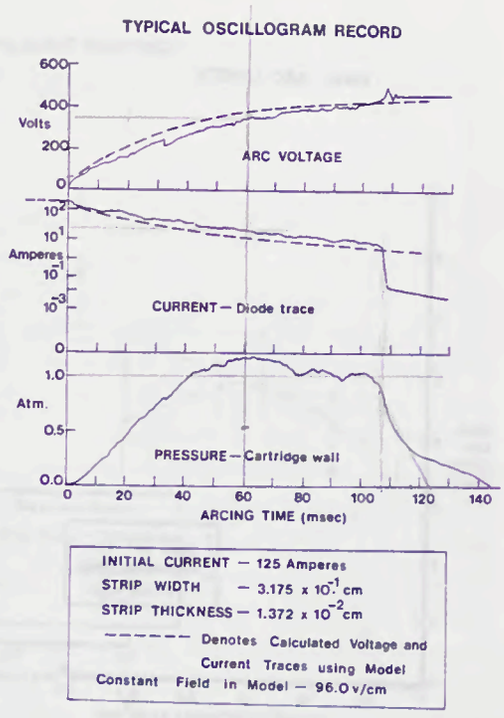

FIGURE 4

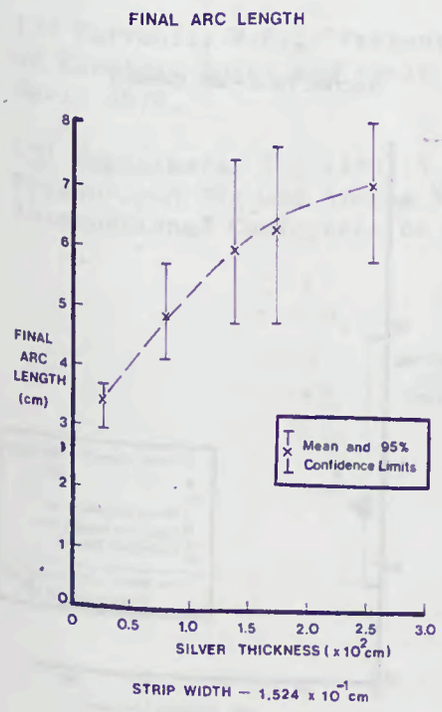

FIGURE 5

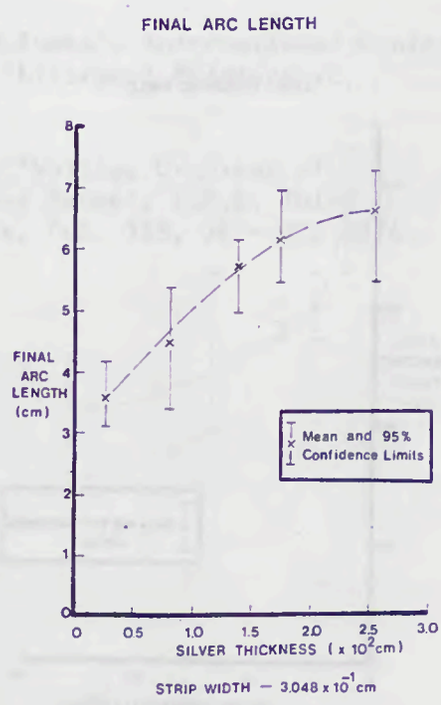

FIGURE 6

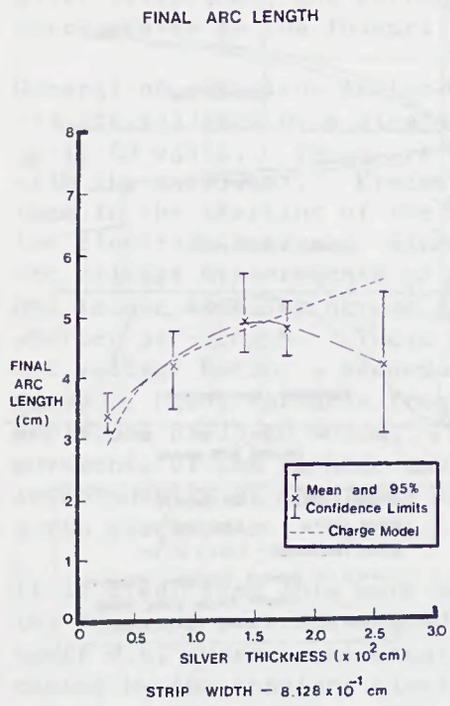

FIGURE 7

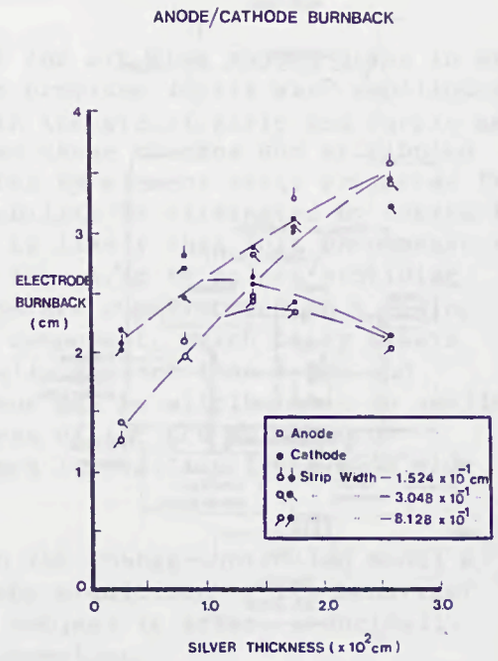

FIGURE 8

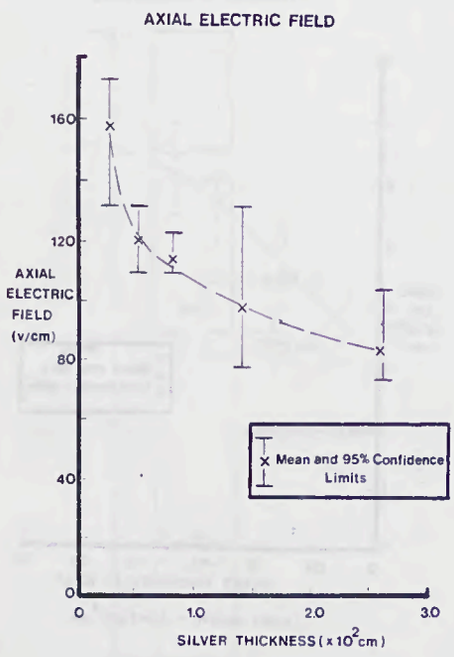

FIGURE 9

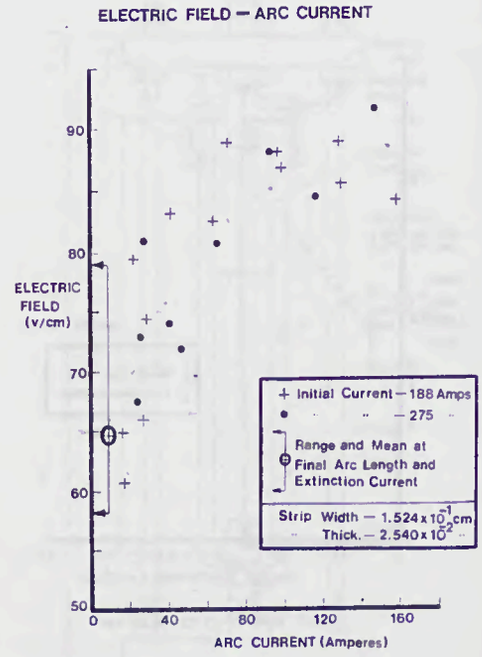

FIGURE 10

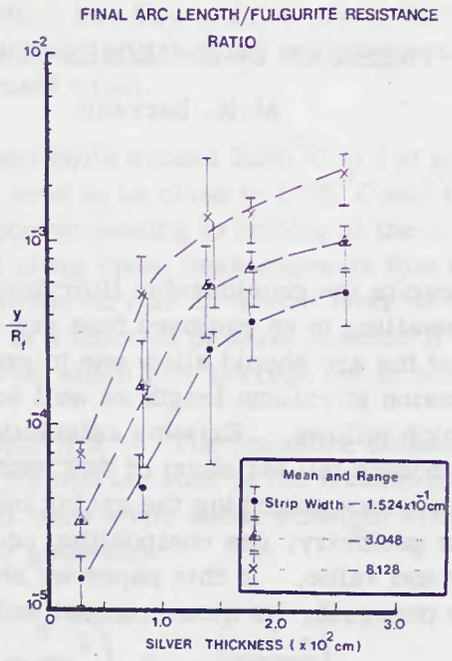

FIGURE 11

REFERENCES

(1) Kroemer, H., 'The Arc in Elements Fusing in Sand', Arch. fur Elecktrotechnik, Vol. 36, 455 - 470, 1942.

(2) Barrault, M.R., 'Pressure in Enclosed Fuses', International Conference on Electric Fuses and their Applications, Liverpool Polytechnic, April 1976.

(3) Sakakibara, T., Kito, Y.,Miyachi, I., 'Voltage Gradient of Pressurised SF_6 Gas Arc in Very Low Current Range', I.E.E. Third International Conference on Gas Discharges, Pub. 118, 24 - 27, 1974.